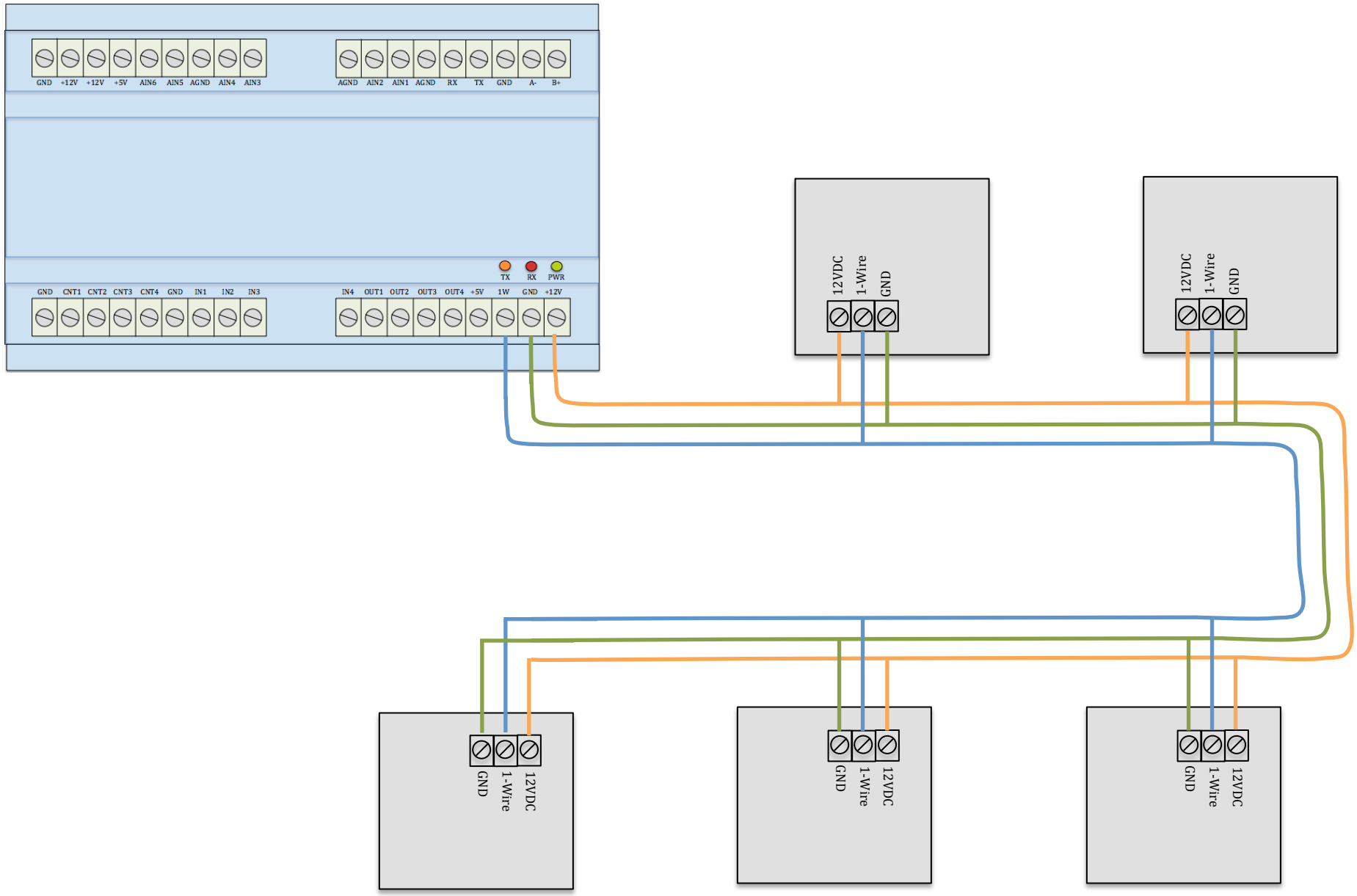
GND +12V +12V +5V AIN6 AIN5 AGND AIN4 AIN3
AGND AIN2 AIN1 AGND RX TX GND A- B+
TX RX PWR
GND CNT1 CNT2 CNT3 CNT4 GND IN1 IN2 IN3
IN4 OUT1 OUT2 OUT3 OUT4 +5V 1W GND +12V
12VDC 1-Wire GND
12VDC 1-Wire GND
GND 1-Wire 12VDC
GND 1-Wire 12VDC
GND 1-Wire 12VDC